Digital design project

DIGITAL DICE

Farah Mašić

Prof. Tarik Namas

January, 2025

Table of Contents

1.1 Introduction 2

1.2 Logic behind the circuit 2

2.1 Components and tools 3

2.2 Process 4

3. Conclusion 6

4. Sources 6

1.1 Introduction

A conventional die is a cube-shaped object commonly used to generate random values between 1 and 6 (or up to 20, depending on the type) for a variety of purposes. It is most often associated with games of chance, tabletop games, and board games. The use of dice dates back to Ancient Egypt, and while their exact origins are unclear, dice have existed for so long that it's difficult to determine when they began to resemble the modern versions we recognize today.

Given their long history, one might wonder: what is the need for digitalized dice?

The answer lies in reliability. A physical die's ability to produce unbiased results can be compromised by external factors. Atmospheric dampness, mechanical stress, and deformations caused by frequent use can all affect the performance and fairness of wooden dice. These limitations highlight the value of digital dice, which offer consistent and reliable outcomes.

1.2 Logic behind the circuit

The "brains" behind the logic of this project are the integrated circuits: NE555 (timer) and CD4017 (decade counter). The timer produces pulses of a certain frequency that simulate rolling the dice. Resistors and capacitors are used to set the timers frequency. The decade counter has 10 output pins (Q0 to Q9) and is responsible for lighting up LED pairs. These LEDs are connected in a way that when the output is produced at most two pairs can be on at the same time (e.g. to make a 4 you need LEDs that represent 1s and 4s pairs). Each IC has multiple pins (legs) coinciding with an action. For the decade counter pins 0-5 controll the LED outputs, while 6-9 are don't cares or reset. MR is reset, Vcc is power suply and GND is ground. Lastly, the push button powers the timer so as long as we are making a connection (push button is "1") our clock is creating pulses and when we let go (push button is "0") the timer is stopped, no more pulses means no more reactions from the decade counter and the corresponding LEDs indicate dice roll result. We can see all of this theory in practice when connecting components. We connected the timer to the resistors and capacitor, as well as the push button. The decade counter is connected to the 1N4007 diodes that are then connected to the LEDs.

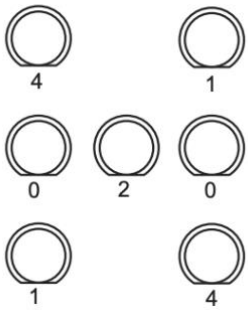

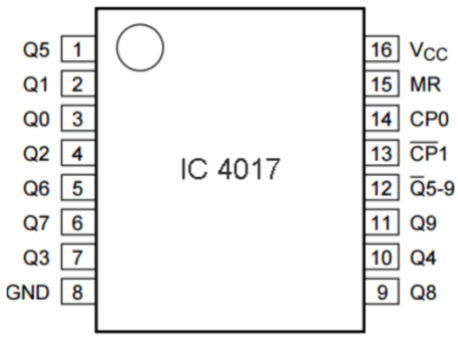

2.1 Components and tools

For this project I needed:

1. 9V battery
2. 9V battery connector
3. Wires for soldering(with isolation)
4. Zero PCB(printed circuit board)
5. 7 LED diodes, 5mm
6. Push button
7. Resistors: 1k Ohm x2, 56k Ohm x1
8. 1N4007 diodes x9
9. Capacitors: 1uF (micro Farad) x1 , 22uF x1
10. IC base: 8 and 16 sockets
11. Integrated circuits: NE555 timer x1, CD4017BE x1

Besides the components tools used for soldering include:

1. Soldering iron
2. Tin soldering wire
3. Soldering grease
4. Pliers
5. Nail files or sand paper

2.2 Process

Creating hardware is a process that begins with selecting the right components for your project and ends with powering it on. After identifying a schematic, the next step is arranging the components on the board according to the design. This step is critical, as components can be connected in series or parallel, and getting this wrong can lead to a non-functional circuit. The schematic used for this project is the following:

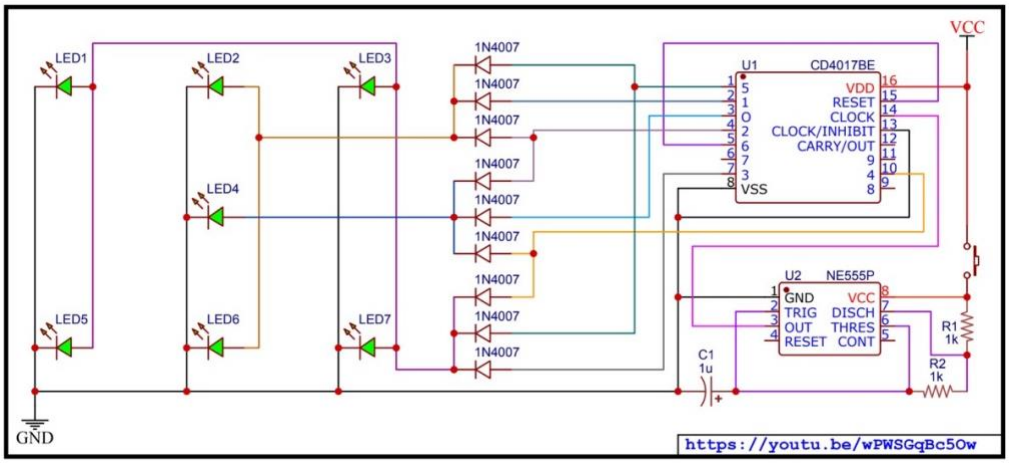

Next, you determine any additional materials needed based on the type of board you're working with. For example, breadboards require specific connecting wires, PCBs use both copper wires and insulated wires, while other boards rely solely on soldering, with the copper underside of the board acting as a conductor. Since we're working with a PCB, the next step involved soldering the components to the board, taking care to ensure the solder doesn't overflow into neighboring holes, as this could cause a short circuit.

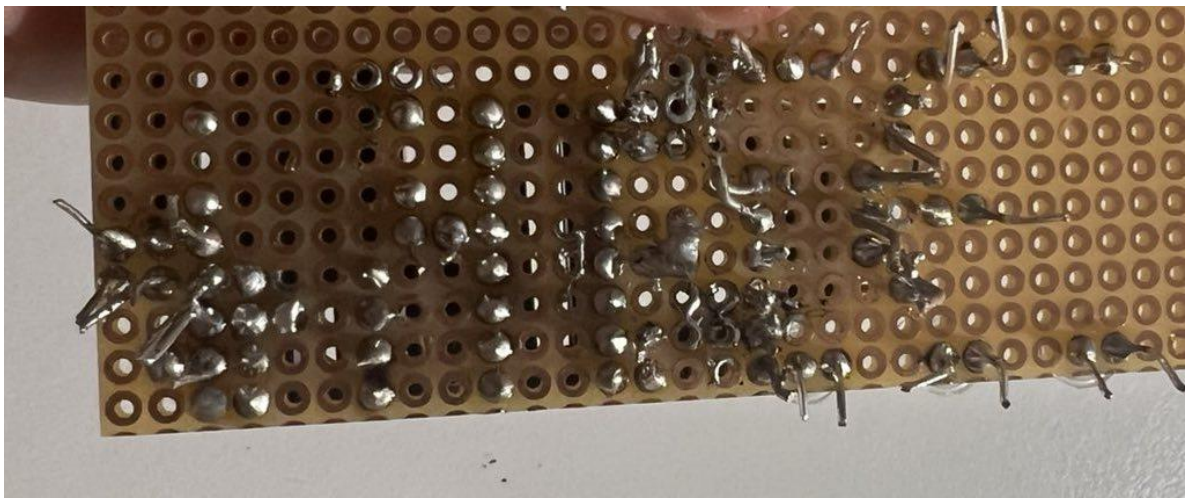

Before introducing wires, certain components are bridged with solder. For example, resistors and capacitors are connected to each other and to the 8-pin socket base to control the NE555 timer, which generates pulses. Similarly, LEDs are soldered to 1N4007 diodes, which also connect to the 16-pin socket base.

Wires are then used to link components that are farther apart. For instance, in the schematic, the final diode connects to the ground (the negative battery terminal) through a chain of connections that includes another diode, the two ICs, and a bridge between the resistors and capacitors where the battery connector is ultimately soldered.

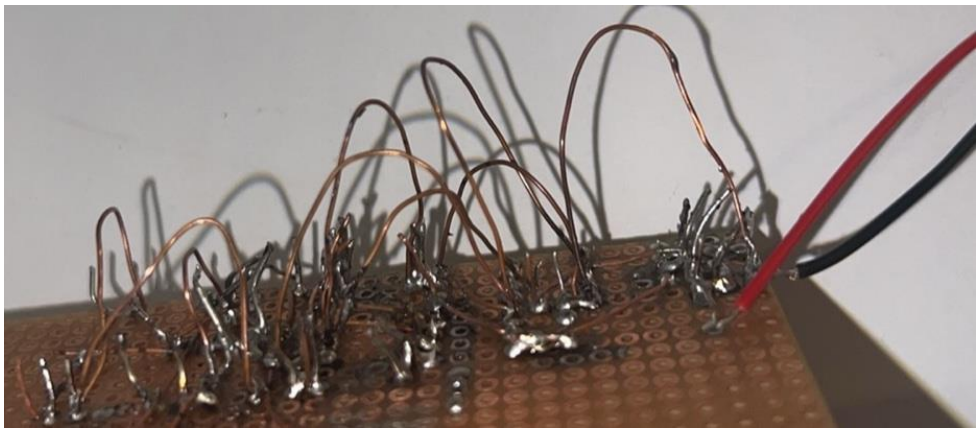

The board features an underlayer of wires that don’t touch and an overlayer of bent wires that are carefully positioned to avoid contact. Finally, the board is thoroughly inspected—preferably with a magnifying glass or a zoomed-in camera—to ensure that no solder has accidentally migrated to unintended areas.

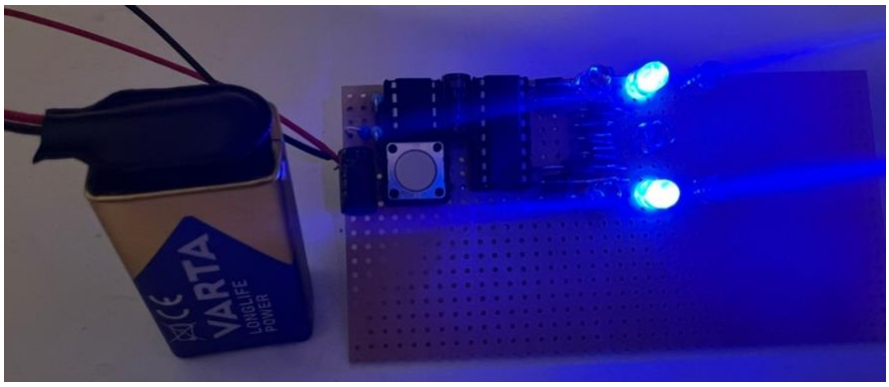

3. Conclusion

From studying the schematic to soldering the components and finally holding a functional product in your hand, creating hardware is a challenging and often "hard" process—but it's an incredibly valuable skill to master. Having worked on hardware before, I can say it’s always a bit like rolling the dice to see if it will work as intended. One thing’s for sure: fixing your own mistakes becomes second nature, as it’s the part of the process you’ll end up doing the most. It’s a process of constantly questioning your work and wondering until the end if you messed up in the beginning. Everything aside, it’s a skill that should be taught and worked on and I am glad I chose to do something more challenging so I could learn something new.

4. Sources

1. https://youtu.be/wPWSGqBc5Ow?si=IpA6AZbQ6JP5j7H7
2. https://picaxe.com/docs/axe105.pdf
3. https://www.electronicshub.org/unbiased-electronic-dice-with-leds/
4. https://youtu.be/Pjsoq-ZejRM?si=Ox3kIez_6goZXHv0
5. https://en.wikipedia.org/wiki/Dice
6. https://circuitdigest.com/electronic-circuits/digital-dice-circuit-using-ic-555
7. https://youtube.com/shorts/1n1ref8LWLQ?si=waGMr59j1JJdJKi4
8. https://youtu.be/dIamTa-B5ds?si=gK6LTSJSNfWIinH5